Clarion®

SH1636C

6.5" 2-WAY COMPONENT SPEAKER

部件 Park

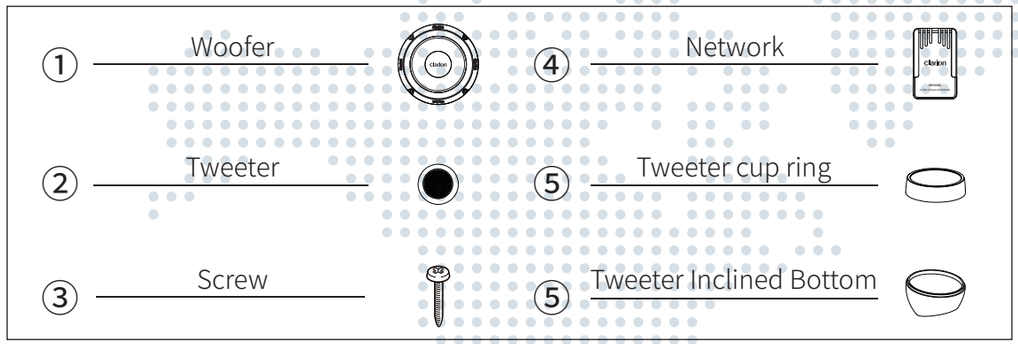

产品结构图 Product Structure Diagram

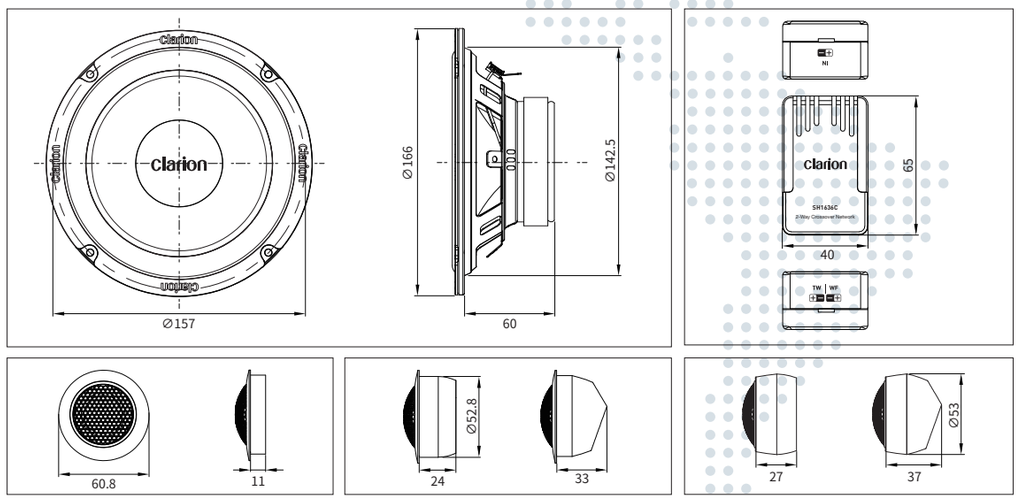

此标志适用于在中国销售的电子电气产品，SJ/T11364《电子电气产品有害物质限制使用标识要求》，表示该产品在使用完结后可再利用。数字表示的是环境保护使用期限，只要遵守与本产品有关的安全和使用上的注意事项，从制造日算起在数字所表示的年限内，产品不会产生环境污染和对人体，财产的影响。产品适当使用后报废的方法请遵从电子电气产品的回收，再利用相关法令。详细请咨询各级政府主管部门。

This mark applies to electrical and electrinic products sold in China, SJ/T11364 "Electrical and Electronic Products Restricted Use of Hazardous Substances Labeling Requirements", indicating that the products can be reused after use. The number indicates the period of use for environmental protection. As long as the safety and use precautions related to this product are observed, the product will not cause environmrntal pollution and impact on human beings and property within the period of years indicated by the number from the date of manufacture. Please follow the laws and regulations related to the recycling and reuse of electrical and electronic products when disposing of the product after appro-prate use. For details, please contact the governmental authorities at all levels.

产品中有害物质的名称及含量

Names And Contents Of Hazardous Substances In Products

部件名称 Part Name	有害物质 Harmful Substance 铅 Pb	水银 Hg	镉 Cd	六价铬 Cr(VI)	多溴联苯 PBB	多溴二苯醚 PBDE
扬声器 Speaker	○	○	○	○	○	○
附　件 Accessory	○	○	○	○	○	○

本表格依据SJ/T11364的规定编制。
○：表示该有害物质在该部件所有均质材料中的含量均在GB/T26572标准规定的限量要求以下
×：表示该有害物质至少在该部件的某一均质材料中的含量超出GB/T26572标准规定的限量要求。因为在现有技术下还没有可替代的物质。

This table is prepared in accordance with the provisions of SJ/T11364.
○: Indicates that the content of the hazardous substance in all homogeneous materials of the component is below the limit requirements specified in the GB/T26572 standard.
×: Indicates that the content of the hazardous substance in at least one homogeneous material of the component exceeds the limit requirements specified in the GB/T26572 standard. Because there is no alternative substance under the current technology.

生产者:佛吉亚歌乐电子(丰城)有限公司
地址:丰城市高新技术产业园区高新大道12号
生产厂址:广东省广州
原产地:中国制造
产品执行标准号:GB/T19392-2024

Manufacturer: Faurecia Clarion Electronics (Fengcheng) Co.,Ltd.
Address: No.12 Gaoxin Avenue, High-tech Industrial Park, FengCheng, China
Manufacturing plant address: Guangzhou, Guangdong Province
Place of Origin: Made in China
Standard No.: GB/T19392-2024

合格品 /CONFORMITY


Clarion®
始于1940
Established in 1940
感 动 你 我 连 接 世 界
Moving you and me Connecting the world